Invented for life

BOSCH

Chassis Components

Precision when it matters



Chassis components
Overview

Bosch chassis components support safe driving behavior and precise handling. They fulfill many safety-relevant functions in chassis and steering systems. The new comprehensive workshop program benefits from Bosch's decades of experience in original equipment manufacturing.

Wide range of chassis components

Bosch's new range of chassis components comprises control arms, tie rods, stabilizer links, control arm bushings, and ball joints. Bosch draws on its decades of experience in steering system development. These safety-critical components are designed to the same specifications as those used for original equipment and are tested to ensure they meet the specific characteristics of the vehicle. Their precise design and production in optimized processes with rigorous end-of-line testing ensure reliable performance throughout their entire service life.

Competent and fast

Bosch not only supplies the product, but also supports customers with diagnostic solutions, installation instructions, and technical expertise. Thanks to its international sales and logistics network, parts are quickly available.



Chassis components
Program

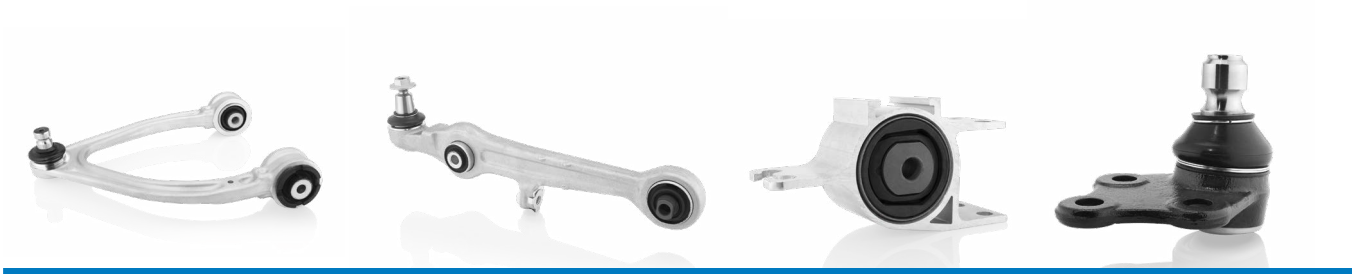

Components for high safety, precise wheel guidance and good road holding

- Control arms (forged, cast, or sheet metal)
- Rubber bushings
- Ball joints



Components for precise steering

- Inner tie rods
- Tie rod ends
- Stabiliser links

Did you know?

Bosch has

Chassis components

for many electric and hybrid vehicles such as Tesla, Renault or Volkswagen and for existing common vehicles with combustion engines in its portfolio.



Tie rod ends
Product details

As the outermost components of the steering system, Bosch tie rod ends connect the steering gear to the wheel carrier and translate the driver's steering inputs into precise wheel movements. In the workshop, they enable exact wheel alignment. Precisely aligned, they support stable steering behavior and help minimize tire wear through correctly aligned components.



Advantages at a glance

- **Precise fit, driving comfort, driving stability and steering accuracy** thanks to precise design according to tight manufacturing tolerances
- **Corrosion resistance and long service life** confirmed by tests that are exceeding industry standards
- **Reliable steering performance** even under difficult road conditions thanks to corrosion-resistant coatings for protection against harsh environmental influences

Workshop tip

Precise

adjustment of the tie rods

after replacement prevents tire wear and enables safe and smooth driving.

Stabilizer links
Product details

By connecting to the suspension, stabilizer links counteract torsional forces during cornering, thus helping to reduce body roll and keep the vehicle level. This stabilizing effect enhances driving safety, steering precision, and comfort, even under challenging road conditions.



Advantages at a glance

- **Driving comfort and stable handling** thanks to precise geometric design for effective vibration damping
- **Corrosion resistance and long service life** confirmed by tests that are exceeding industry standards
- **Quiet and stable operation under demanding road conditions** thanks to resistance to environmental influences and chemicals in the engine compartment – such as oil
- **Easy installation in the workshop** thanks to the exact fit and consistent suspension performance due to the precise design

Workshop tip

Fastening screws

must not be reused for safety reasons. Therefore, Bosch spare parts usually include the necessary fasteners.

Rubber bushings
Product details

Based on Bosch's extensive experience in original equipment manufacturing, the rubber bushings are designed and installed to minimize vibrations and absorb shocks from the road. This promotes stable handling, increases driving comfort, and improves overall safety.

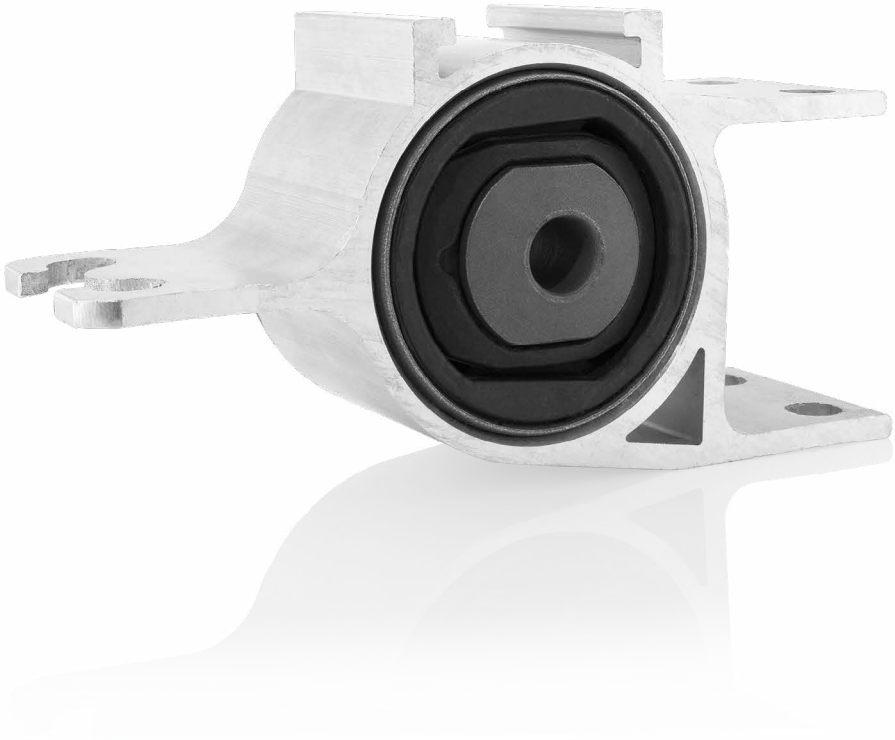

Advantages at a glance

- **Precise fit, effective vibration damping, improved driving comfort and smooth handling** thanks to specially developed rubber compounds tailored to the vehicle
- **Reliable performance and longer durability on demanding roads** thanks to resistance to chemicals in the engine compartment and harsh environmental conditions
- **Consistent suspension and damping performance after servicing** thanks to the exact fit resulting from precise design

Did you know?

Bosch rubber bushings undergo **shear tests** under extreme conditions at temperatures ranging from

-40 to 120 °C.

This ensures the adhesion between rubber and metal over a wide temperature range. The consistency of the component and material properties across this temperature range is verified through testing.

Tie rods
Product details

Tie rods connect the steering gear and steering knuckle, transmitting steering movements to the wheels. The threaded connection allows for precise adjustment during wheel alignment, particularly of the toe angle, which directly affects driving stability and tire wear.



Advantages at a glance

- **Driving comfort, driving stability and steering precision** thanks to an exact fit according to tight manufacturing tolerances
- **Corrosion resistance and long service life** confirmed by tests that are exceeding industry standards
- **Reliable steering performance** even under difficult road conditions thanks to corrosion-resistant coatings for protection against environmental influences
- **Smooth, efficient installation in the workshop** and stable steering performance after replacement thanks to optimized component design

Did you know?

Tie rods provide

mechanical protection

for the steering gear. In accidents or high impact collisions with curbs, the tie rods buckle, preventing costly damage to the steering system.

Inner tie rods
Product details

Inner tie rods ensure precise power transmission from the steering gear to the wheel suspension. Bosch offers inner tie rods made from specially selected materials, with corrosion-resistant coatings and reinforced joint structures to insure reliable performance even under demanding conditions.



Advantages at a glance

- **Driving comfort, driving stability and steering precision** thanks to an exact fit according to tight manufacturing tolerances
- **Corrosion resistance and long service life** confirmed by tests that are exceeding industry standards
- **Protected against environmental influences,** even under difficult road conditions, thanks to corrosion-resistant coatings
- **Smooth, efficient installation in the workshop** and stable steering performance after replacement thanks to optimized component design

Did you know?

To check the robustness of threads during installation in the workshop, **thread strength tests** are carried out. Bosch tie rods also pass tests with

excessive tightening torque,

and remain fully functional.

Control arms
Product details

As the connection between the body and the wheel carrier, the control arms stabilize the wheels, ensuring precise steering and safe road holding. Bosch control arms are designed for durability and are easy to install thanks to their precise fit. They are precisely adapted to each vehicle model during development and undergo rigorous testing.



Advantages at a glance

- **Corrosion resistance and long service life** confirmed by tests that are exceeding industry standards
- **Reliable performance throughout its entire lifespan** due to high mechanical strength
- **Reliable protection under demanding environmental conditions** through resistance to corrosion, stone chips and chemical attack.
- **Easy installation** thanks to precise fit

Did you know?

To avoide

mispositioning

of the rubber bearings, installation must be carried out in the vehicle's normal driving position, for example by lowering the lift before final tightening.

Ball joints
Product details

The housings of Bosch ball joints are manufactured to endure all environmental conditions. Age-resistant bearings and semi-synthetic lubricants, specially developed for demanding engine compartment conditions, support easy installation, consistent and defined friction, and reliable steering feel while driving.



Advantages at a glance

- **High strength under mechanical stress,** precise steering movements and a harmonious driving experience throughout the entire service life thanks to carefully selected materials, based on Bosch's original equipment experience
- **Corrosion resistance and long service life** confirmed by tests that are exceeding industry standards
- **High robustness** due to reliable sealing against contamination and corrosion

Did you know?

Bosch ball joints undergo **a friction stability test** under extreme conditions at temperatures ranging from

-40 to 120 °C.

This ensures consistent friction stability over a wide temperature range.

Workshop software ESI[tronic]
Information on 130,000 vehicles

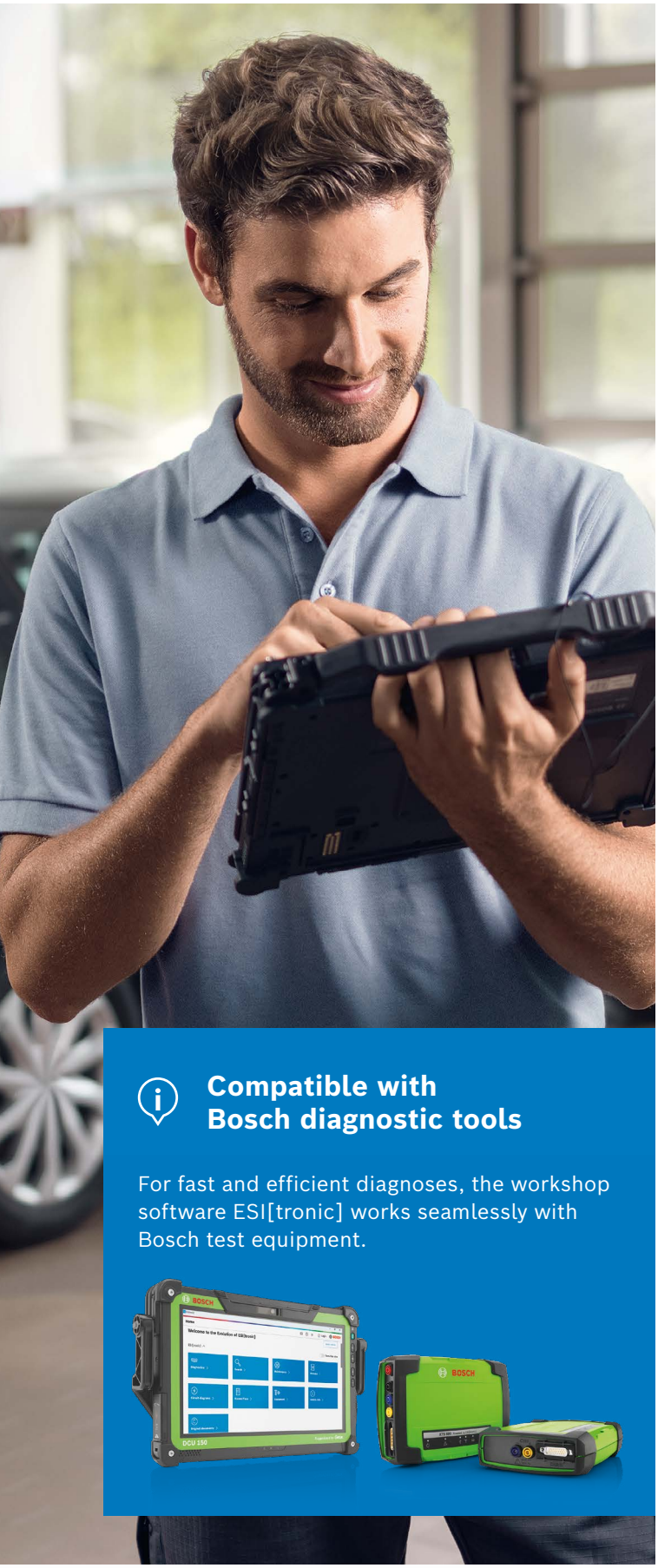

Compatible with Bosch diagnostic tools

For fast and efficient diagnoses, the workshop software ESI[tronic] works seamlessly with Bosch test equipment.

With ESI[tronic], Bosch offers a comprehensive software solution for diagnostics and repairs. As a modular product, the workshop solution can be expanded with additional options if required.

With its high vehicle coverage, ESI[tronic] diagnostic software enables efficient and effective maintenance, repair and servicing for almost all workshop requirement. ESI[tronic] allows access information on 130,000 vehicles from around 150 brands, maintenance and wiring diagrams, diagnostics repair and troubleshooting guides, manuals and experience-based repair information (EBR).

Advantages at a glance

Extensive market coverage
A wide range of vehicle makes and models as cars and commercial vehicles

Time-saving, easy handling
Intuitive user interface with advanced functions

Precise and reliable
Diagnostic experience from the developer and original equipment supplier Bosch

Extended functions
Detailed diagnostics of vehicle systems, components and engines

Future-proof
Access to protected vehicle data via Secure Diagnostic Access

Up-to-date information
Regular updates with new vehicle information

Cost benefit
Comprehensive functionalities for independent workshops and small businesses

Scalable
Networking-compatible – independent of the number of computers in the company

Accessible support
Technical support via online resources and telephone support

Compatible with Bosch products
Full compatibility in the workshop through Bosch Connected Repair

What drives you
drives us

Bosch technologies are used in most vehicles worldwide.
People, and assuring their mobility, is what we are focused on.

Therefore, we have dedicated over 130 years of pioneering spirit
and expertise in research and manufacturing to achieving this.

We provide the aftermarket and workshops worldwide with modern diagnostic and workshop equipment and a wide range of spare parts for passenger cars and commercial vehicles:

- solutions for efficient vehicle repairs
- innovative workshop equipment and software
- one of the world's most comprehensive ranges of new and exchange parts
- large network of wholesale customers, for quick and reliable parts supply
- competent hotline support
- comprehensive educational and training offers
- targeted sales and marketing support

Find out more at:
boschaftermarket.com

Robert Bosch GmbH

Auf der Breit 4
76227 Karlsruhe
Germany

2025/12 Subject to technical and program changes